PATT Driver

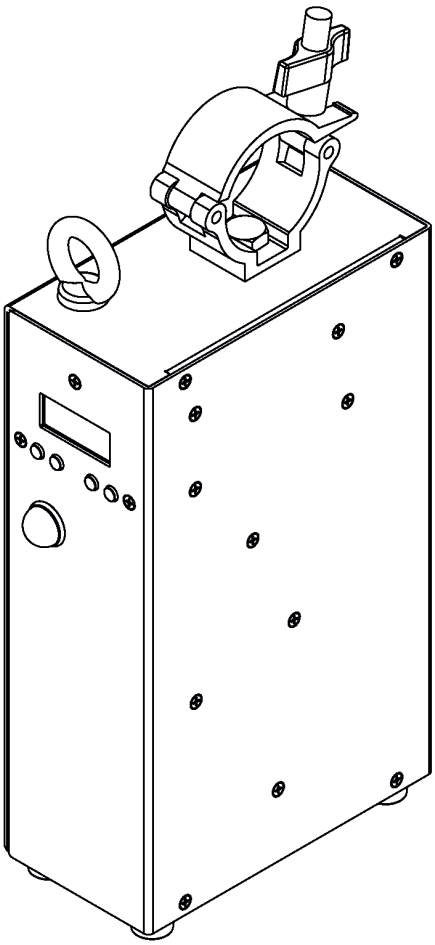

QR code for user manual

USER MANUAL

ROBE® Lighting s.r.o. • Czech republic • www.robe.cz

Version 1.7

Table of contents

1. Safety instructions **3**
2. Description of the fixture **4**
3. Installation **4**
3.1 Connection the PATT Driver to mains 4
3.2 Connecting a PATT module to the PATT Driver 5
3.3 Rigging the PATT Driver 5
4. PATT Driver DMX operation **5**
5. Control menu **7**
5.1 DMX Addr 7
5.2 Info 7
5.3 Personality 8
5.4 Manual 9
5.5 Test Program 9
5.6 Stand Alone 9
5.5 Special settings 9
6. Technical specifications **12**
7. Appendix -DMX modes overview **14**

FOR YOUR OWN SAFETY, PLEASE READ THIS USER MANUAL CAREFULLY BEFORE YOU INSTALL THE PRODUCT .

1. Safety instructions

CAUTION!
The PATT Driver was designed for indoor use only.
The product is for professional use only, it is not for household use.

This product has left our premises in absolutely perfect condition. In order to maintain this condition and to ensure a safe operation, it is absolutely necessary for the user to follow the safety instructions and warning notes written in this manual.

The manufacturer will not accept liability for any resulting damages caused by the non-observance of this manual or any unauthorized modification to the product.

If the device has been exposed to drastic temperature fluctuation (e.g. after transportation), do not switch it on immediately. The arising condensation water might damage your device. Leave the device switched off until it has reached room temperature.

DANGEROUS VOLTAGE CONSTITUTING A RISK OF ELECTRIC SHOCK IS PRESENT WITHIN THE PATT DRIVER!

Make sure that the available voltage is not higher than stated on the PATT Driver.

The PATT Driver should be operated only from the type of power source indicated on the marking label. If you are not sure of the type of power supplied, consult your authorized distributor or local power company.

WARNING! The Patt Driver does not contain an ON/OFF switch. Always disconnect power input cable to completely remove power from unit when not in use or before cleaning or servicing the fixture or connected LED rings.

The power plug has to be accessible after installing the fixture. Do not overload wall outlets and extension cords as this can result in fire or electric shock.

Do not allow anything to rest on the power cord of the PATT Driver. Do not locate this fixture where the power cord may be damaged by persons walking on it.

The PATT Driver never must be covered with cloth or other materials during its operation.

Refer servicing to qualified service personnel.

This PATT Driver falls under protection class I. Therefore this device has to be connected to a mains socket outlet with a protective earthing connection.

Warning: Operation of this equipment in a residential environment could cause radio interference.

Do not connect the Patt Driver to a dimmer pack.

When choosing the installation spot, please make sure that the PATT Driver is not exposed to extreme heat, moisture or dust.
Operate the PATT Driver only after having familiarized with its functions. Do not permit operation by persons not qualified for operating the PATT Driver. Most damages are the result of unprofessional operation!

Please use the original packaging if the PATT Driver is to be transported.

Please consider that unauthorized modifications on the fixture are forbidden due to safety reasons!

2. Description of the fixture

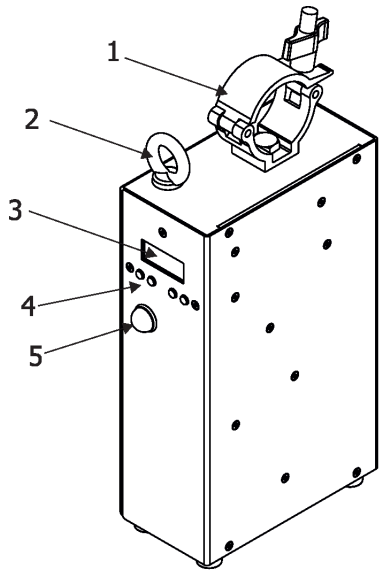

1 - Clamp
2 - Safety attachment eyelet
3 - Display
4 - Control buttons
5 - Antenna
6 - LED port (4-pin XLR)
7 - DMX OUT (5-pin XLR)
8 - DMX OUT (3-pin XLR)
9 - Ethernet OUT
10 - Mains Output
11- DMX IN (5-pin XLR)
12- DMX IN (3-pin XLR)
13- Ethernet IN
14- Fuse holder
15- Mains Input

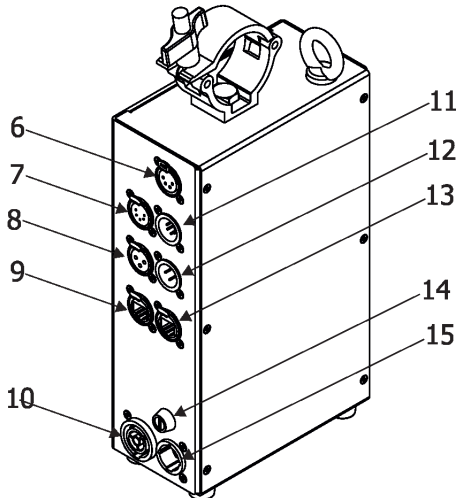

3. Installation

The PATT Driver must be installed by a qualified electrician in accordance with all national and local electrical and construction codes and regulations.

3.1 Connection the PATT Driver to mains

For protection from electric shock, the PATT Driver must be earthed!

The PATT Driver is equipped with auto-switching power supply that automatically adjusts to any 50-60Hz AC power source from 100-240 Volts.
If you need to install a cord cap on the power cable to allow connection to power outlets, install a grounding-type (earthed) plug, following the plug manufacturer's instructions.
The cores in the power cable are coloured according to the following table.

Core (EU)	Core (US)	Connection	Plug Terminal Marking
Brown	Black	Live	L
Light blue	White	Neutral	N
Yellow/Green	Green	Earth	⏚

The PATT Driver falls under class one and must be earthed (grounded)!

Design of the PATT Driver allows to connect several fixtures to AC mains power in one interconnected daisy chain using power in/out throughput connectors.The max. number of interconnected fixtures (with original power and daisy chain cables from Robe) depends on the AC mains voltage.

Mains voltage	CE	cETLus
230V	12 fixtures	7 fixtures
208V	10 fixtures	5 fixtures
120V	6 fixtures	3 fixtures

Real number of fixtures may differ from values stated above as you have to take into account the length of supply cables, circuit breaker etc. at projecting of the fixtures installation. Do not overload the supply line and connecting leads.
Wiring and connection work must be carried out by qualified staff!

3.2 Connecting a PATT module to the PATT Driver

1. Disconnect the PATT Driver from mains.
2. Connect the PATT module to the PATT Driver by means of the 4-pin data cable.
3. Connect the PATT Driver to mains and make desired setting.

3.3 Rigging the PATT Driver

The PATT Driver is equipped with the clamp for rigging on a truss. For securing the PATT Driver to the truss, install a safety wire that can hold at least 10 times the weight of the fixture. Use only the safety wire with a snap hook with screw lock gate. Fasten the snap hook in the safety attachment eyelet and the safety wire around the truss.

4. PATT Driver DMX operation

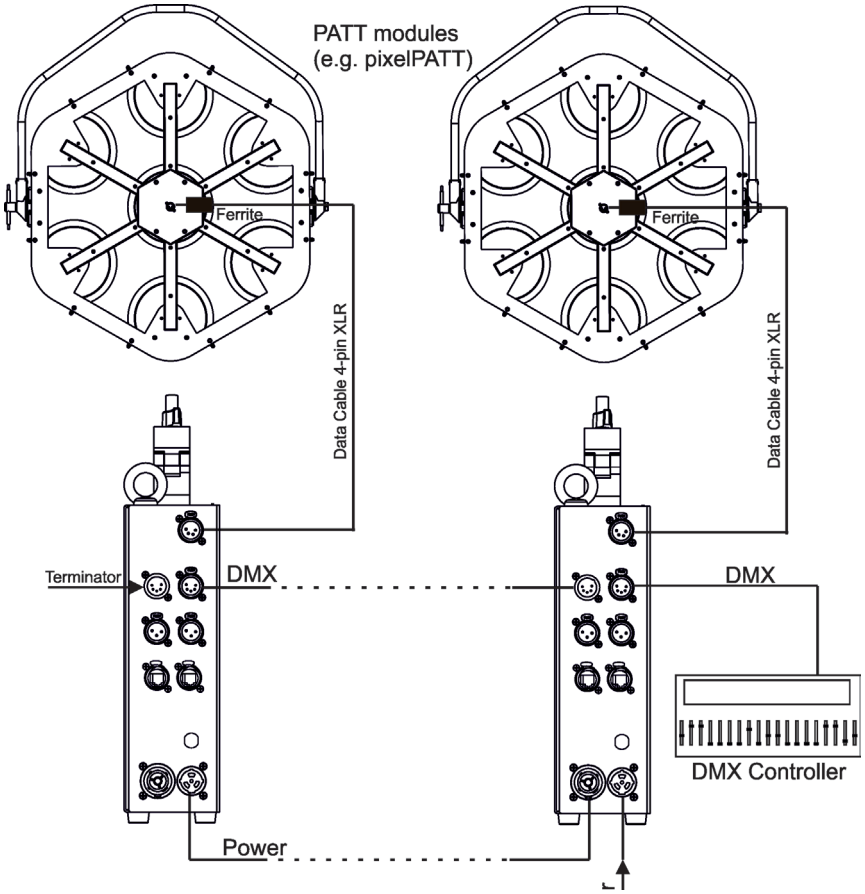

ALWAYS DISCONNECT THE PATT DRIVER FROM MAINS BEFORE CONNECTING/DISCONNECTING LED MODULE.

For CE versions of PATT modules only: If you do not use the original Robe Data Cable 4-pin XLR for connection between PATT module and the PATT Driver, the ferrite RRC 17-11-28-M-K5B (Robe P/N 13051799) should be installed on the 4-pin XLR cable closely to the PATT module as shown on the picture bellow.
If you use the original Robe 4-pin XLR cable, this ferrite is part of the cable and you do not need to install another ferrite on the cable.

Example for PATT 2017

Ferrite RRC 17-11-28-M-K5B

The PATT Driver is equipped with both 3-pin and 5-pin XLR sockets for DMX input and output. Use only a shielded twisted-pair cable designed for RS-485 and 3-pin or 5-pin XLR connectors in order to connect the controller with the fixture or one fixture with another.

DMX output
XLR mounting sockets (rear view):

1 - Shield
2 - Signal (-)
3 - Signal (+)
4 - Not connected
5 - Not connected

DMX input
XLR mounting plugs (rear view):

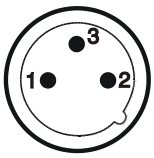

1 - Shield
2 - Signal (-)
3 - Signal (+)
4 - Not connected
5 - Not connected

Building a serial DMX chain:
Connect the DMX output of the first fixture with the DMX input of the next fixture in a DMX chain. Always connect DMX output with the DMX input of next fixture until all fixtures are connected. Up to 32 fixtures can be connected.
Caution: At the last fixture, the DMX line has to be terminated with a terminator. Solder a 120 Ω resistor between Signal (–) and Signal (+) into a 3-pin (5-pin) XLR-connector and plug it in the DMX output of the last fixture.

5. Control menu

The PATT Driver is equipped with 2-row LCD display which allows to set the fixture´s behaviour according to your needs and obtain information on its operation.

Control panel:

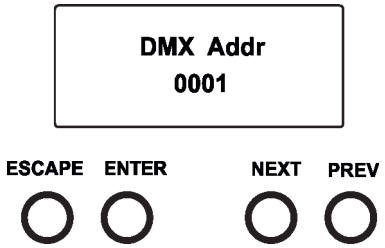

[ESCAPE] button used to leave the menu without saving changes.
[NEXT] , [PREV] buttons for moving between menu items and for value adjusting.
[ENTER] button used to enter the selected menu (menu item) and to confirm adjusted value.

After switching the fixture on, display shows current DMX address.

5.1 DMX Addr

Set DMX Address - use this menu item to set the DMX start address of the fixture, which is defined as the first channel from which the PATT Driver will respond to the DMX controller.

IP address - select this menu item to set desired IP address. IP address is the Internet protocol address.The IP uniquely identifies any node (fixture) on a network. There cannot be 2 fixtures with the same IP address on the network!

Default Address. This address is derived from fixture´s MAC address and cannot be changed. Confirm the item **"Set Address"** to select this address.

Custom Address. IP address consists of four decimal numbers, each ranging from 0 to 255, separated by dots, e.g., 172.16.254.1. Each part represents a group of 8 bits (octet) of the address.
The following items **"IP Adr 1"**, **" IP Adr 2", " IP Adr 3", " IP Adr 4"** allow to set each part (number) of the address. After setting desired IP address, confirm the item **"Set Address"** to save this address.

Network mask - select this menu item to set desired network mask. A network mask is a 32-bit mask used to divide an IP address into subnets and specify the networks available hosts.
The following items **"Net M.1"**, **"Net.M.2", " Net.M.3", " Net.M.4"** serve for seting of each part (number) of the net mask.
After setting desired network mask, confirm the item **"Set Net M."** to save adjusted values.

5.2 Info

Use this menu to read useful information about the fixture.

Software version - select this menu item to read software versions.

IC-M - PATT Driver control processor.
IC-DR - LED driver control processor (in a LED module).
IC-L - LED control processor (in a LED module).

IP Addr - **IP address. T**his menu item shows the current IP address (the IP address "runs" on display).

RDM UID - **RDM UID.** Select this menu item to read the RDM UID (the RDM UID "runs" on display).

MAC Addr - **MAC Address.** Select this menu item to read the MAC address (the MAC address "runs" on display).

DMX In - DMX readout. The menu is used to read DMX values of each channel received by the fixture.

Temp - Temperature. Temperature on the PATT Driver control PCB.

5.3 Personality

Use this menu to modify the PATT Driver operating behavior.

DMX Pres - DMX preset. Use the menu to select desired channel mode - please see the DMX chart.

DMX Input - this menu allows you to choose desired DMX data input:

Wired - DMX signal is received by means of the standard DMX cable.
Wireless - DMX signal is received by means of the inbuilt wireless DMX module.
Wireless Out DMX- the fixture receives wireless DMX and sends the signal to its wired DMX output. The fixture behaves as a " Wireless/Wired" adapter.
Ethernet - The fixture uses Ethernet input.

Ethernet Settings - use the menu item to select and set desired operating mode.

Ethernet mode - use the menu to select a protocol.

Artnet - fixture receives Artnet protocol
sACN - fixture receives sACN protoco
gMAI - fixture receives MANet I protocol
gMAII - fixture receives MANet 2 protocol

ArtNet Settings - use the menu item to set parameters for ArtNet operation.

Net - this option allows to select a network (0-127)
Sub-Net - this option allows to select a subnet (0-15).
Universe - this option allows to select an Universe (0-15).

ArtNet is a proprietary protocol for transmitting DMX512 (with RDM) over UDP/IP. Up to sixteen DMX512 universes can be accessed through one IP subnet. The Universe is a single DMX 512 frame of 512 channels.

MANet Settings - Use this menu to set parameters for MANet operation.

MA. Uni - MANet I (II) universe. The value of this item can be set in range of 1-256.
MA. S. ID - MANet I(II) session ID. The value of this item can be set in range of 1-32.

sACN Uni - **sACN Universe**. The value of this item can be set in range of 1-63999.

I**GMP rep** - Repeating time for Internet Group Management Protokol (Off, 1s-10s).
KlingNET - Use this menu item to enable or disable Kling-net protocol.

Display Settings - this menu allows you to change the display settings.

Display Off Timer - if this item is on the display will be swiched off 2 minutes after last pressing any button on the control panel.
Display Lightness - select this menu item to adjust the display intensity (0-100%).
Display Contrast- select this menu item to adjust contrast of the display (0-100%).

C. Mix. Mode - This item allows switching into RGBW or CMY mode. In the CMY mode, the white(8bit)/white (16) bit channels are not active.

Dimmer Curve - Select this option to select desired dimmer curve: linear (Linear) or square law (Square).

White Point - **White point 8000K**. If the function is on, the CTC channel allows to set desired white in range of 8000K-2700K (0 DMX=8000K, 64 DMX=5600K, 128 DMX=4200K, 192 DMX=3200K, 255 DMX=2700K). Necessary condition is , that RGBW channels have to be full or set at the same DMX values, e.g. 150.
If this function is off, the range of whites is not uniform and may be different for each fixture.

Automatic white pixel On/Off - In pixel control DMX modes, this function allows automatic activation of the white LEDs, based on levels of RGB pixels.

Tungsten Eff. Sim. - This function simulates behaviour of a halogen lamp during dimming at calibrated whites 2700K, 3200K. You can select from various lamp wattage simulation: 750W, 1000W, 1200W, 2000W, 2500W.

DMX Hold - If this item is On, the last received DMX values are held in the fixture in case, that DMX data receiving was interrupted (e.g. disconnected DMX controller).

Initial Positions - Use the menu to set all effects to the desired positions at which they will stay after switching the fixture on without DMX signal received.

Output Freq. - The function allows you to select PWM (Pulse Width Modulation) output frequency of LEDs from two frequencies.

Standard - The frequency is 300 Hz (default setting).
High - The frequency is 1200Hz.

Freq. Adjust - LEDs frequency fine adjustment. The function allows you to change the selected PWM output frequency of LEDs in 6 levels up and down around the selected frequency in the menu “Output Freq”.

-6...-1 - Frequence levels 1-6 under selected frequency.
0 - Selected frequency (Standard or High)
1...6 - Frequence levels 1-6 above selected frequency.

Default settings - select this option to set fixture personalities to the default (factory) values.

5.4 Manual

Use the menu to control all fixture channels by means of the control panel.

Note: items in the menu depend on selected DMX mode.

5.5 Test Program

Use the menu to run a test sequences without an external controller, which will show you some possibilities of using the PATT Driver in conjunction with LED module.

5.6 Stand Alone

Auto Run - **Presetting playback**. This function allows you to select a program which will be played switching the fixture on. Selected program will be played continuously in a loop.

Off - the option disables „Auto Run” function.
Test - the option will start Test Program.
User 1 - the option will start user program 1.
User 2 - the option will start user program 2.

Program Play - **Playing program**. Select this menu to run a user program in a loop.

User 1 - the option starts user program 1.
User 2 - the option starts user program 2.
Select the program you wish and press [ENTER]. The selected program starts running.
By Pressing [ENTER] again, the program pauses running.

Edit Prg - **Editing program**. Select this menu to edit or create a program. The PATT Driver has two user-editable programs up to 50 steps each. Each program step has a step time - during which effects last in the current step.

To edit program:

1. Press [NEXT] or [PREV] button to select desired program and press [ENTER] button.
2. Set a total number of the program steps to the menu item S. Count (e.g. if you want to create a program with 10 steps, set S. Count=10).
3. By means of the [NEXT] or [PREV] button select desired step and press [ENTER] button.
4. By means of the [NEXT] or [PREV] button select desired item and press [ENTER] button. Now you can edit DMX value of selected item using [NEXT] and [PREV] buttons. Press [ENTER] button to confirm adjusted value.
5. Repeat point 4 for all items in the current program step.
6. Select next program steps and repeat steps 4 and 5.

5.7 Special settings

Wireless - **Wireless DMX information**. The menu allows to read some information about Wireless DMX operation

Stat - **Wireless status**. Use the menu to read wireless DMX status.
Unlink - use this item to unlink the fixture from wireless DMX transimitter.

Adjust - **Adjustment**. The menu allows a calibration of white colour.

DMX Values- **DMX values**. Use the menu to set DMX values of fixture´s channels.

Colour Cal. - Use this menu to calibrate the white colour 5600K of the LED module.

Calibration of the white 5600K via the control board

1. Disconnect DMX controller from the fixture , set the Backgroud shutter/Master shutter, Background dimmer/ Master dimmer and RGBW channels at 255 DMX, and the CTC channel at DMX=64 (white 5600K). Aim the light beam (from connected device) on the lux meter (e.g. Minolta CL-70F Chroma meter) which is placed cca 4 m from the fixture.
2. Set the menu items "C. Mix Mode" to RGBW and "White Point" to On (Personality-> C Mix Mode -> RGBW, Personality-> White Point -> On).
3. Enter the menu "Colour Cal.".
4. By means of the "Red C, Green C, Blue C and White C" items adjust the 5600K colour temperature as exactly as possible ($\Delta u'v' = 0$).
5. After adjusting 5600K colour temperature, select item Store and press the [ENTER] button to save adjusted values .

Note: you can also use DMX controler for calibration stated above, calibration protocol is the following:

Effect	***Mode 1***	***Mode 2***	***Mode 3***	***Mode 4***	***Mode 5***
Red - red saturation	channel 14	channel 33	channel 41	channel 48	channel 54
Green- green saturation	channel 15	channel 34	channel 42	channel 49	channel 55
Blue - blue saturation	channel 16	channel 35	channel 43	channel 50	channel 56
White - white saturation	channel 17	channel 36	channel 44	channel 51	channel 57

Update software - The menu item allows you to update software in the fixture via either serial or USB port of PC.
If you need to update the LED driver control processor (IC-DR) or the LED control processor (IC-L), the LED module has to be connected to the PATT Driver!
The following items are required in order to update software:
- PC running Windows or Linux or macOS
- DSU file
- Flash cable RS232/DMX, P/N13050624 (if you want to use a serial port of PC)
- Robe Universal Interface or Robe Universal interface WTX (if you want to use an USB port of PC)

After the software updating the fixture will be set to default values.

To update software in the fixture:

1. DSU file is available from Robe web site at WWW.robe.cz.
   File with extension zip is intended for Windows (used and tested from XP to W10 on 32/64bit systems).
   File with extension tbz is intended for Linux (used and tested on Debian and Ubuntu 32/64bit).
   File with extension dmg is intended for macOS (used and tested on OSX up to Sierra) XQuartz required, install it from https://www.xquartz.org/
   Save the download file to a folder on your computer.
   In case that you use windows, extract files in the zip file (e.g. DSU_PixelPATT_19021549.zip)
2. Disconnect the fixture from DMX controller.
3. If you use the flash cable RS232/DMX, connect a serial port of your computer with DMX input of the fixture by means of the cable.
   If you use the Robe Universal Interface, connect a USB port of your computer with the Robe Universal Interface by means of the USB cable and DMX input of the fixture with the DMX output of the Robe Universal Interface via a DMX cable.
4. Switch the fixture to the update mode (tab "Service" --> Update Software).
   Note: If you do not want to continue in the software update, you have to switch off and on the fixture to escape from the updating mode.
   We recommend to cancel all running programs on your computer before starting the software update.
5. Double-click the software uploader file (e.g. DSU_PixelPATT_19021549.exe) in the extracted files. The Software Uploader program will start running.

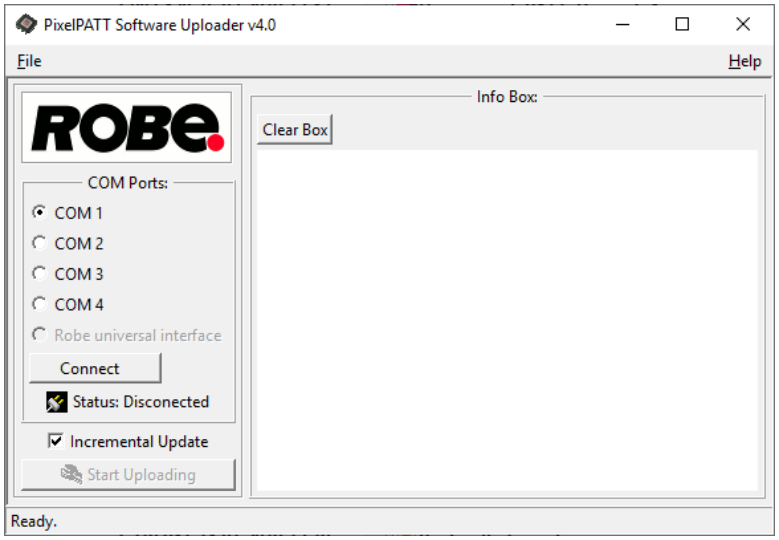

6. Select correct "COM " number if you use a Flash cable RS232/DMX or select "Robe Universal Interface " if you use the Robe Universal Interface/Robe Universal Interface WTX and then click on the "Connect" button.
7. If the connection is OK, click the “Start Uploading" button to start software uploading. It will take several minutes to perform software update.
   If the option "Incremental Update" is not checked, all processors will be updated (including processors with the same software version).
   If you wish to update only processors with new version of software, check the “Incremental Update box“.
   Avoid interrupting the process. Update status is being displayed in the "Info Box" window.
   When the update is finished, the line with the text “Fixture is successfully updated“ will appear in this window.

In case upload process is interrupted (e.g. power loss), the fixture stays in “Updating mode” and you will have to repeat the software update again.

Another way, how to update software in the fixtures (especially large installation of fixtures) is to use the ROBE Uploader. It is a software for automatized software update of Robe fixtures. It takes advantage of RDM support).
For more information please see https://www.robe.cz/robe-uploader/.

6. Technical specifications

Input voltage range:	100-240V, 50-60Hz
Max. power consumption :	240W (power factor 0.95)
Fuse:	T 3.15 A
Mains input:	16A max. (CE), 10A max. (cETLus)
Mains output:	15A max. (CE), 9A max. (cETLus)
Setting & Addressing:	two-row LCD display & 4 control buttons
Protocols:	USITT DMX-512, RDM, ArtNet, sACN,gMA I, gMA II, Kling-Net
Wireless DMX:	Wireless CRMX™ technology from Lumen Radio (on request)
Colour mixing:	RGBW/CMY
Virtual colour wheel:	66 preset colours
Strobe:	Pre-programmed random strobe & pulse effects
Dimmer:	High resolution electronic dimming
Number of user programs:	2 (up to 50 steps each)
Number of LED ports:	1 (Locking 4-pin XLR, female)
DMX IN/OUT:	Locking 5-pin/3-pin XLR (male/female)
Power IN:	Neutrik Neutrik powerCON TRUE1 NAC3MPX
Power OUT:	Neutrik Neutrik powerCON TRUE1 NAC3FPX
Ethernet port in/out:	RJ45
Max. number of fixtures in Ethernet IN/Out line:	7
Maximum surface temperature:	55 °C (at 40°C ambient)
Maximum ambient operating temperature:	40 °C
Protection factor:	IP20 (for dry location only)
Weight:	3.8 kg
Rigging:	via clamp
Total heat dissipation (calculated):	818 BTU

Dimensions (mm)

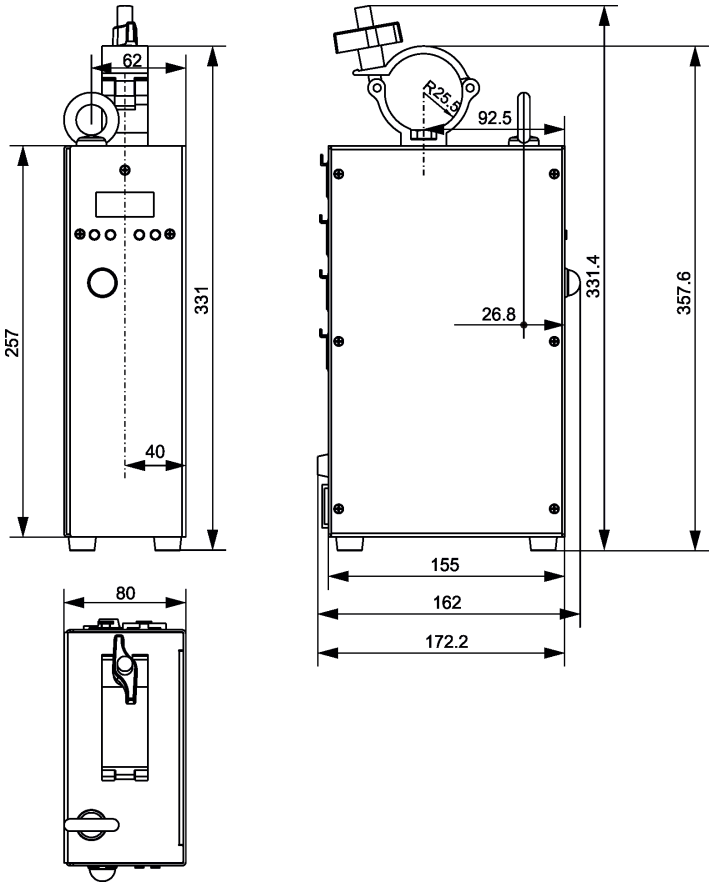

Connection

LED port

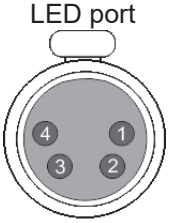

Front view

1 - 0V
2 - Signal -
3 - Signal +
4 - +5V

DMX IN

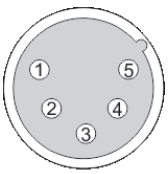

Front view

1 - 0V (shield)
2 - Signal -
3 - Signal +
4 - Not connected
5 - Not connected

DMX OUT

Front view

Optional Accessories
(P/N 13052797) Data cable 4 pin XLR 10m, ferrite, EU
(P/N 13052798) Data cable 4 pin XLR 5m, ferrite, EU
(P/N 13052799) Data cable 4 pin XLR 10m, US
(P/N13052800) Data cable 4 pin XLR 5m, US
(P/N 1305 2439) Daisy Chain PowerCon TRUE1 In/Out, EU, 2m, indoor
(P/N 1305 2440) Daisy Chain PowerCon TRUE1 In/Out, US, 2m, indoor
(P/N 13052444) Daisy Chain PowerCon TRUE1 In/Out, EU, 5m, indoor
(P/N 1305 2405) Mains Cable PowerCon In TRUE1/Schuko, 2m, indoor
(P/N 1305 2406) Mains Cable PowerCon In TRUE1/US, 2m, indoor
(P/N 1305 2407) Mains Cable PowerCon In TRUE1/open ended, 2m, indoor
(P/N 13052443) Mains Cable PowerCon In TRUE1/Hubb 2321, 2m US, indoor
(P/N 13052445) Mains Cable PowerCon In TRUE1/CEE 16A, 2m, indoor
(P/N 13051799) Ferite RRC 17-11-28-M-K5B

Copyright © 2017-2022 Robe Lighting - All rights reserved
Specifications are subject to change without notice.
May 31, 2022
Made in ROBE Lighting s.r.o., Palackého 416, 757 01 Valašské Meziříčí, Czech Republic

7. Appendix - DMX modes overview

Pixel modes underlined

Mode	DMX Channels	Main Features
Mode 1	13	Virtual colour wheel 8-bit control of four colours (R,G,B,W) and Dimmer Without control of individual pixels
Mode 2	32	Virtual colour wheel 16-bit control of four individual colours (R,G,B,W) and Dimmer Pixel patterns control (shape, repeat/size, rotation, transition, fade, crossfade, colour) Without control of individual pixels
Mode 3	40	Virtual colour wheel 16-bit control of four colours (R,G,B,W) and Dimmer Individual control of pixels (R,G,B)
Mode 4	47	Virtual colour wheel 16-bit control of four individual colours (R,G,B,W) and Dimmer Individual control of pixels (R,G,B,W)
Mode 5	53	Virtual colour wheel 16-bit control of four individual colours (R,G,B,W) and Dimmer Pixel patterns control (shape, repeat/size, rotation, transition, fade, crossfade, colour) Individual control of pixels (R,G,B)
Mode 6	60	Virtual colour wheel 16-bit control of four individual colours (R,G,B,W) and Dimmer Pixel patterns control (shape, repeat/size, rotation, transition, fade, crossfade, colour) Individual control of pixels (R,G,B,W)
Mode 7	28	Individual control of pixels (R,G,B,W)

PATT Driver - DMX protocol

Version: 1.3 **Mode 1**-Wash, **Mode 2**-Pattern, **Mode 3**-Pixel RGB, **Mode 4**-Pixel RGBW, **Mode 5**-Pattern full RGB, **Mode 6**-Pattern full RGBW, Mode 7-Pixel RGBW only

Mode/channel							DMX Value	Function	Type of control
1	2	3	4	5	6	7			
1	1	1	1	1	1	*		**Power/Special functions**	
							0 -9	Reserved (0=default)	
								To activate following functions, stop in DMX value for at least 3 s and shutter must be closed at least 3 sec. („Master Shutter/Strobe" channel 12/30/17/17/30/30 must be at range: 0-31 DMX). Corresponding menu items are temporarily overriden.	
							10-14	DMX input: Wired DMX	step
							15-19	DMX input: Wireless DMX *	step
								* function is active only10 seconds after switching the fixture on	
							20-24	Display ON	step
							25-29	Display OFF	step
							30-34	RGBW colour mixing mode	step
							35-39	CMY colour mixing mode	step
							40-44	Dimmer curve-square law	step
							45-49	Dimmer curve-linear	step
							50-54	White point 8000K ON	step
							55-59	White point 8000K OFF	step
							60-64	Automatic white pixel On	step
							65-69	Automatic white pixel Off	step
							70-109	Reserved	
							110-114	Kling-Net On	step
							115-119	Kling-Net Off	step
							120-169	Reserved	
								To activate following functions, stop in DMX value. Corresponding menu items are temporarily overriden	
							170-171	Tungsten effect simulation (750W) On **	step
							172-173	Tungsten effect simulation (1000W) On **	step
							174-175	Tungsten effect simulation (1200W) On **	step
							176-177	Tungsten effect simulation (2000W) On **	step
							178-179	Tungsten effect simulation (2500W) On **	step
							180-181	Tungsten effect simulation Off	step
							182-184	Reserved	
							185	PWM output frequency of LEDS: Standard (300Hz)**	step
							186	PWM output frequency of LEDS: High (1200Hz)**	step
								** You can adjust selected frequency in 6 steps Up or Down around selected frequency - see table below . Default value of PWM frequency set in the fixture is Standard.	
							187	LED Frequency (step -6)	step
							188	LED Frequency (step -5)	step
							189	LED Frequency (step -4)	step
							190	LED Frequency (step -3)	step
							191	LED Frequency (step -2)	step
							192	LED Frequency (step -1)	step
							193	LED Frequency (Standard or High)	step
							194	LED Frequency (step +1)	step
							195	LED Frequency (step +2)	step

Mode/channel							DMX Value	Function	Type of control
1	2	3	4	5	6	7			
							196	LED Frequency (step +3)	step
							197	LED Frequency (step +4)	step
							198	LED Frequency (step +5)	step
							199	LED Frequency (step +6)	step
							200 - 255	Reserved	
2	**2**	**2**	**2**	**2**	**2**	*****		**Background - Virtual colour wheel**	
							0	No function (0=default)	step
							1-2	Filter 4 (Medium Bastard Amber)	step
							3-4	Filter 25 (Sunset Red)	step
							5-6	Filter 19 (Fire)	step
							7-8	Filter 26 (Bright Red)	step
							9-10	Filter 58 (Lavender)	step
							11-12	Filter 68 (Sky Blue)	step
							13-14	Filter 36 (Medium Pink)	step
							15-16	Filter 89 (Moss Green)	step
							17-18	Filter 88 (Lime Green)	step
							19-20	Filter 90 (Dark Yellow Green)	step
							21-22	Filter 49 (Medium Purple)	step
							23-24	Filter 52 (Light Lavender)	step
							25-26	Filter 102 (Light Amber)	step
							27-28	Filter 103 (Straw)	step
							29-30	Filter 140 (Summer Blue)	step
							31-32	Filter 124 (Dark Green)	step
							33-34	Filter 106 (Primary Red)	step
							35-36	Filter 111 (Dark Pink)	step
							37-38	Filter 115 (Peacock Blue)	step
							39-40	Filter 126 (Mauve)	step
							41-42	Filter 117 (Steel Blue)	step
							43-44	Filter 118 (Light Blue)	step
							45-46	Filter 122 (Fern Green)	step
							47-48	Filter 182 (Light Red)	step
							49-50	Filter 121 (Filter Green)	step
							51-52	Filter 128 (Bright Pink)	step
							53-54	Filter 131 (Marine Blue)	step
							55-56	Filter 132 (Medium Blue)	step
							57-58	Filter 134 (Golden Amber)	step
							59-60	Filter 135 (Deep Golden Amber)	step
							61-62	Filter 136 (Pale Lavender)	step
							63-64	Filter 137 (Special Lavender)	step
							65-66	Filter 138 (Pale Green)	step
							67-68	Filter 798 (Chrysalis Pink)	step
							69-70	Filter 141 (Bright Blue)	step
							71-72	Filter 147 (Apricot)	step
							73-74	Filter 148 (Bright Rose)	step
							75-76	Filter 152 (Pale Gold)	step
							77-78	Filter 154 (Pale Rose)	step
							79-80	Filter 157 (Pink)	step
							81-82	Filter 143 (Pale Navy Blue)	step

Mode/channel							DMX Value	Function	Type of control
1	2	3	4	5	6	7			
							83-84	Filter 162 (Bastard Amber)	step
							85-86	Filter 164 (Flame Red)	step
							87-88	Filter 165 (Daylight Blue)	step
							89-90	Filter 169 (Lilac Tint)	step
							91-92	Filter 170 (Deep Lavender)	step
							93-94	Filter 172 (Lagoon Blue)	step
							95-96	Filter 194 (Surprise Pink)	step
							97-98	Filter 180 (Dark Lavender)	step
							99-100	Filter 181 (Congo Blue)	step
							101-102	Filter 197 (Alice Blue)	step
							103-104	Filter 201 (Full C.T. Blue)	step
							105-106	Filter 202 (Half C.T. Blue)	step
							107-108	Filter 203 (Quarter C.T. Blue)	step
							109-110	Filter 204 (Full C.T. Orange)	step
							111-112	Filter 219 (Fluorescent Green)	step
							113-114	Filter 206 (Quarter C.T. Orange)	step
							115-116	Filter 247 (Filter Minus Green)	step
							117-118	Filter 248 (Half Minus Green)	step
							119-120	Filter 281 (Three Quarter C.T. Blue)	step
							121-122	Filter 285 (Three Quarter C.T. Orange)	step
							123-124	Filter 352 (Glacier Blue)	step
							125-126	Filter 353 (Lighter Blue)	step
							127-128	Filter 507 (Madge)	step
							129-130	Filter 778 (Millennium Gold)	step
							131-132	Filter 793 (Vanity Fair)	step
							133-235	Raw DMX	proportional
							236-245	Rainbow effect (with fade time) from slow-> fast	proportional
							246-255	Rainbow effect (without fade time) from slow-> fast	proportional
3	**3**	**3**	**3**	**3**	**3**	*		**Background - Red/Cyan (8 bit)*** **	
							0 - 255	Colour saturation control - coarse 0-100% (255=default)	proportional
*	**4**	**4**	**4**	**4**	**4**	*		**Background - Red/Cyan (16bit)*** **	
							0 - 255	Colour saturation control - fine (255=default)	proportional
4	**5**	**5**	**5**	**5**	**5**	*		**Background - Green/Magenta (8 bit)*** **	
							0 - 255	Colour saturation control - coarse 0-100% (255=default)	proportional
*	**6**	**6**	**6**	**6**	**6**	*		**Background - Green/Magenta (16bit) *** **	
							0 - 255	Colour saturation control - fine (255=default)	proportional
5	**7**	**7**	**7**	**7**	**7**	*		**Background - Blue/Yellow (8 bit)*** **	
							0 - 255	Colour saturation control - coarse 0-100% (255=default)	proportional
*	**8**	**8**	**8**	**8**	**8**	*		**Background - Blue/ Yellow (16bit)*** **	
							0 - 255	Colour saturation control - fine (255=default)	proportional
6	**9**	**9**	**9**	**9**	**9**	*		**Background - White (8 bit) - all pixels**	
								If RGBW mode is selected:	
							0-255	Colour saturation control - coarse 0-100% (255=default)	proportional
								If CMY mode is selected:	
							0 - 255	No function	
*	**10**	**10**	**10**	**10**	**10**	*		**Background - White (16 bit) - all pixels**	
							0 - 255	Colour saturation control - fine (255=default)	proportional
7	**11**	**11**	**11**	**11**	**11**	*		**Background - CTC**	

Mode/channel							DMX Value	Function	Type of control
1	2	3	4	5	6	7			
								If function "White Point 8000K" is ON	
							0-255	Col. temperature correction from 8000K to 2700K -for whites only	proportional
								(0=8000K, 64=5600K, 128=4200K, 192=3200K, 255=2700K)	
								To get colour temperatures stated above, RGBW channels have to be set at the same value (e.g. 255DMX) or RGB=0 and White channel > 0 DMX (0=default)	
								(To activate Tungsten effect at 2700K and 3200K , set DMX value at "Power/Special functions" channel)	
								If function "White Point 8000K" is OFF	
							0-255	*Colour temperature correction from cool col. to warm colour*	proportional
8	**12**	**12**	**12**	**12**	**12**	*		**Background - Shutter/ strobe**	
							0 - 31	Shutter closed	step
							32 - 63	Shutter open (32=default)	step
							64 - 95	Strobe effect from slow to fast	proportional
							96 - 127	Shutter open	step
							128 - 143	Opening pulse in sequences from slow to fast	proportional
							144 - 159	Closing pulse in sequences from fast to slow	proportional
							160 - 191	Shutter open	step
							192 - 223	Random strobe effect from slow to fast	proportional
							224 - 255	Shutter open	step
9	**13**	**13**	**13**	**13**	**13**	*		**Background - Dimmer intensity (8 bit)**	
							0 - 255	Dimmer intensity from 0% to 100% (0=default)	proportional
*	**14**	**14**	**14**	**14**	**14**	*		**Background Dimmer intensity - fine (16 bit)**	
							0 - 255	Fine dimming (255=default)	proportional
10	**15**	**15**	**15**	**15**	**15**	*		**Background - Active zone**	
							0-2	All pixels (0=default)	
							3-4	Ring	step
							5-6	Halves	step
							7-8	Quarters	step
							9-255	Raw DMX	proportional
11	**16**	**16**	**16**	**16**	**16**	*		**Colour Mix control**	
								The channel defines relation between color channels	
								Global = Global Colours (Background RGBW, Background Virtual Colour Wheel, Background CTC)	
								Pixel = Pixel Colours (RGB individual pixels or Kling-Net)	
							0-9	Global colours (Global has priority)	
							10-19	Maximum mode (highest values have priority)	step
							20-29	Minimum mode (lowest values have priority)	step
							30-39	Multiply mode (multiply Global and Pixel)	step
							40-49	Addition mode (Global + Pixel) (45=default)	step
							50-59	Subtraction mode (Global – Pixel)	step
							60-69	Inverted Subtraction mode (Pixel – Global)	step
							70-79	Coloured background	step
							80-127	Raw DMX	proportional
							128	Global colours only (Global has priority)	step
							129-254	Crossfade (crossfade between Global and Pixel)	proportional
							255	Pixel colours (Pixel has priority)	step
*	**17**	*	*	**17**	**17**	*		**Pattern selection**	
							0-2	No pattern (0=default)	

Mode/channel							DMX Value	Function	Type of control
1	2	3	4	5	6	7			
							3-4	Pattern 1	step
							5-6	Pattern 2	step
							7-8	Pattern 3	step
							9-10	Pattern 4	step
							11-12	Pattern 5	step
							13-14	Pattern 6	step
							15-16	Pattern 7	step
							17-18	Pattern 8	step
							19-20	Pattern 9	step
							21-22	Pattern 10	step
							23-24	Pattern 11	step
							25-255	RAW DMX	proportional
*	**18**	*	*	**18**	**18**	*		**Pattern - Repeat (Size)**	
							0-2	Variant 1 (0=default)	step
							3-4	Variant 2	step
							5-6	Variant 3	step
							7-8	Variant 4	step
							9-10	Variant 5	step
							11-12	Variant 6	step
							13-14	Variant 7	step
							15-16	Variant 8	step
							17-18	Variant 9	step
							19-20	Variant 10	step
							21-22	Variant 11	step
							23-255	Raw DMX	proportional
*	**19**	*	*	**19**	**19**	*		**Pattern - Rotation**	
							0	No rotation (0=default)	step
							1-127	Pattern indexing	proportional
							128-190	Forwards rotation from fast to slow	proportional
							191-192	Pause - without rotation	step
							193-255	Backwards rotation from slow to fast	proportional
*	**20**	*	*	**20**	**20**	*		**Pattern - Fade**	
							0	Snap (0=default)	step
							1-255	Fade from min. to max.	proportional
*	**21**	*	*	**21**	**21**	*		**Pattern -Transition**	
							0	No fade (0=default)	step
							1	100ms	step
								:	
							255	4 sec	step
*	**22**	*	*	**22**	**22**	*		**Pattern - Crossfade**	
							0	Background	step
							1-255	Crossfade between Background and Pattern 0-100% (255=default)	proportional
*	**23**	*	*	**23**	**23**	*		**Pattern - Red (8-bit)**	
							0 - 255	Colour saturation control - coarse 0-100% (255=default)	proportional
*	**24**	*	*	**24**	**24**	*		**Pattern - Green (8-bit)**	
							0 - 255	Colour saturation control - coarse 0-100% (255=default)	proportional
*	**25**	*	*	**25**	**25**	*		**Pattern - Blue (8-bit)**	
							0 - 255	Colour saturation control - coarse 0-100% (255=default)	proportional

Mode/channel							DMX Value	Function	Type of control
1	2	3	4	5	6	7			
*	26	*	*	26	26	*		**Pattern - White (8-bit)**	
							0 - 255	Colour saturation control - coarse 0-100% (255=default)	proportional
*	27	*	*	27	27	*		**Pattern - Colour macro**	
							0-2	No macro (0=default)	step
								Macros 1-5 allow control of colour change speed from min. to max.	
							3-8	Macro 1	proportional
							9-14	Macro 2	proportional
							15-20	Macro 3	proportional
							21-26	Macro 4	proportional
							27-32	Macro 5	proportional
							33-255	Raw DMX	proportional
*	28	*	*	28	28	*		**Pattern - Shutter/ strobe**	
							0 - 31	Shutter closed	step
							32 - 63	Shutter open (32=default)	step
							64 - 95	Strobe effect from slow to fast	proportional
							96 - 127	Shutter open	step
							128 - 143	Opening pulse in sequences from slow to fast	proportional
							144 - 159	Closing pulse in sequences from fast to slow	proportional
							160 - 191	Shutter open	step
							192 - 223	Random strobe effect from slow to fast	proportional
							224 - 255	Shutter open	step
*	29	*	*	29	29	*		**Pattern - Dimmer intensity (8 bit)**	
							0 - 255	Dimmer intensity from 0% to 100% (255=default)	proportional
12	30	17	17	30	30	*		**Master Shutter/ strobe**	
							0 - 31	Shutter closed	step
							32 - 63	Shutter open (32=default)	step
							64 - 95	Strobe effect from slow to fast	proportional
							96 - 127	Shutter open	step
							128 - 143	Opening pulse in sequences from slow to fast	proportional
							144 - 159	Closing pulse in sequences from fast to slow	proportional
							160 - 191	Shutter open	step
							192 - 223	Random strobe effect from slow to fast	proportional
							224 - 255	Shutter open	step
13	31	18	18	31	31	*		**Master Dimmer intensity (8 bit)**	
							0 - 255	Dimmer intensity from 0% to 100% (0=default)	proportional
*	32	19	19	32	32	*		**Master Dimmer intensity - fine (16 bit)**	
							0 - 255	Fine dimming (0=default)	proportional
*	*	20	20	33	33	1		**Red pixel 1**	
							0-255	Red LED saturation control 0-100% (0=default)	proportional
*	*	21	21	34	34	2		**Green pixel 1**	
							0-255	Green LED saturation control 0-100% (0=default)	proportional
*	*	22	22	35	35	3		**Blue pixel 1**	
							0-255	Blue LED saturation control 0-100% (0=default)	proportional
*	*	*	23	*	36	4		**White pixel 1**	
							0-255	White LED saturation control 0-100% (0=default)	proportional
								:	
*	*	38	44	51	57	25		**Red pixel 7**	
							0-255	Red LED saturation control 0-100% (0=default)	proportional

Mode/channel							DMX Value	Function	Type of control
1	2	3	4	5	6	7			
*	*	39	45	52	58	26		**Green pixel 7**	
							0-255	Green LED saturation control 0-100% (0=default)	proportional
*	*	40	46	53	59	27		**Blue pixel 7**	
							0-255	Blue LED saturation control 0-100% (0=default)	proportional
*	*	*	47	*	60	28		**White pixel 7**	
							0-255	White LED saturation control 0-100% (0=default)	proportional
* function is active only 10 seconds after switching the fixture on									
** In the Tungsten effect simulation the Dimmer channel imitates behaviour of the halogen lamp during dimming									
*** Select RGB or CMY mixing mode on channel "Power/Special functions"									
Copyright © 2017-2019 Robe Lighting s.r.o. - All rights reserved									
All Specifications subject to change without notice									

PATT Driver - colours on Virtual Colour Wheel				
Colour name	**Red** (DMX)	**Green** (DMX)	**Blue** (DMX)	**White** (DMX)
Filter 4 (Medium Bastard Amber)	255	1320	0	160
Filter 25 (Sunset Red)	255	76	0	3
Filter 19 (Fire)	255	26	0	0
Filter 26 (Bright Red)	255	12	0	0
Filter 58 (Lavender)	117	0	94	62
Filter 68 (Sky Blue)	31	164	146	10
Filter 36 (Medium Pink)	255	74	8	84
Filter 89 (Moss Green)	69	232	0	0
Filter 88 (Lime Green)	175	255	0	0
Filter 90 (Dark Yellow Green)	5	255	0	0
Filter 49 (Medium Purple)	255	0	61	0
Filter 52 (Light Lavender)	219	77	31	141
Filter 102 (Light Amber)	206	144	0	0
Filter 103 (Straw)	191	123	0	41
Filter 140 (Summer Blue)	0	166	48	201
Filter 124 (Dark Green)	24	255	0	27
Filter 106 (Primary Red)	255	9	0	0
Filter 111 (Dark Pink)	255	56	32	12
Filter 115 (Peacock Blue)	0	255	54	22
Filter 126 (Mauve)	255	0	75	0
Filter 117 (Steel Blue)	133	189	41	186
Filter 118 (Light Blue)	0	255	105	27
Filter 122 (Fern Green)	98	255	0	18
Filter 182 (Light Red)	255	34	2	1
Filter 121 (Filter Green)	159	255	0	0
Filter 128 (Bright Pink)	255	0	36	46
Filter 131 (Marine Blue)	95	222	58	62
Filter 132 (Medium Blue)	0	213	157	0
Filter 134 (Golden Amber)	166	76	0	0
Filter 135 (Deep Golden Amber)	255	68	0	0
Filter 136 (Pale Lavender)	172	79	34	86
Filter 137 (Special Lavender)	162	72	71	86
Filter 138 (Pale Green)	208	255	7	90
Filter 798 (Chrysalis Pink)	93	0	98	26
Filter 141 (Bright Blue)	0	135	84	4
Filter 147 (Apricot)	201	107	0	15
Filter 148 (Bright Rose)	255	4	12	57
Filter 152 (Pale Gold)	179	91	0	57
Filter 154 (Pale Rose)	215	98	0	110
Filter 157 (Pink)	255	33	0	102
Filter 143 (Pale Navy Blue)	8	143	104	85
Filter 162 (Bastard Amber)	185	109	6	72
Filter 164 (Flame Red)	255	45	0	4
Filter 165 (Daylight Blue)	28	255	154	68
Filter 169 (Lilac Tint)	206	118	12	12
Filter 170 (Deep Lavender)	235	123	80	42
Filter 172 (Lagoon Blue)	0	236	91	5

Colour name	Red (DMX)	Green (DMX)	Blue (DMX)	White (DMX)
Filter 194 (Surprise Pink)	113	0	83	255
Filter 180 (Dark Lavender)	120	4	173	140
Filter 181 (Congo Blue)	22	0	255	20
Filter 197 (Alice Blue)	75	116	155	72
Filter 201 (Full C.T. Blue)	205	195	131	170
Filter 202 (Half C.T. Blue)	224	203	83	170
Filter 203 (Quarter C.T. Blue)	232	221	58	170
Filter 204 (Full C.T. Orange)	220	127	3	11
Filter 219 (Fluorescent Green)	99	101	18	50
Filter 206 (Quarter C.T. Orange)	205	138	0	96
Filter 247 (Filter Minus Green)	233	61	20	205
Filter 248 (Half Minus Green)	214	101	7	205
Filter 281 (Three Quarter C.T. Blue)	236	218	131	147
Filter 285 (Three Quarter C.T. Orange)	181	116	0	22
Filter 352 (Glacier Blue)	3	222	122	96
Filter 353 (Lighter Blue)	44	189	106	97
Filter 507 (Madge)	255	49	0	7
Filter 778 (Millennium Gold)	255	86	0	0
Filter 793 (Vanity Fair)	255	0	34	20